SRF112 1回路 2接点 / 1-pole 2-position

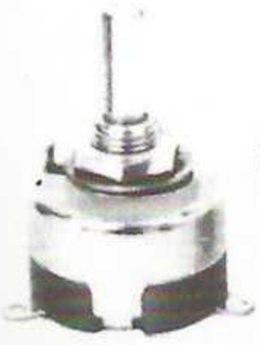

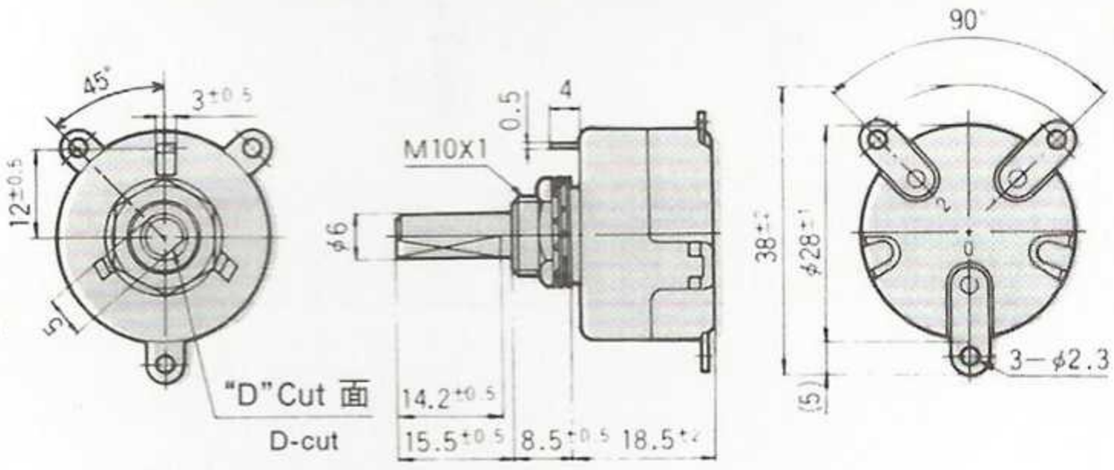

Terminal number shown on box

Shaft stop	Terminal connecting.common(C) 1	2	Circuit diagram	Number of step	Step angle
1	O		Co 1 2	2	90°
2		O			

●The circuit diagram shown above is the one when shaft is fully turned counterclockiwise

Rating		Initial contact resistance	Dielectric strength	Insulation resistance	Electrical life
SRF112	AC125V 6A AC250V 3A	20mΩ Max. (DC2~4V 1A)	AC1500V 1minute	100MΩ Min (DC500V)	10,000 cycles

●Ratings are at resistive load.

■ Pannel Hole / Panel Cut-Out Dimensions

Panel thickness : 3.5mm max

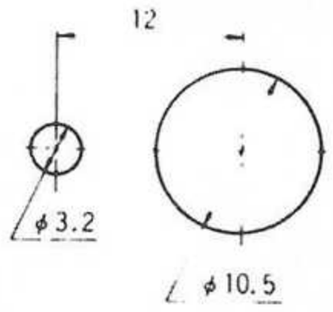

SRF113 1回路 3接点 / 1-pole 3-position

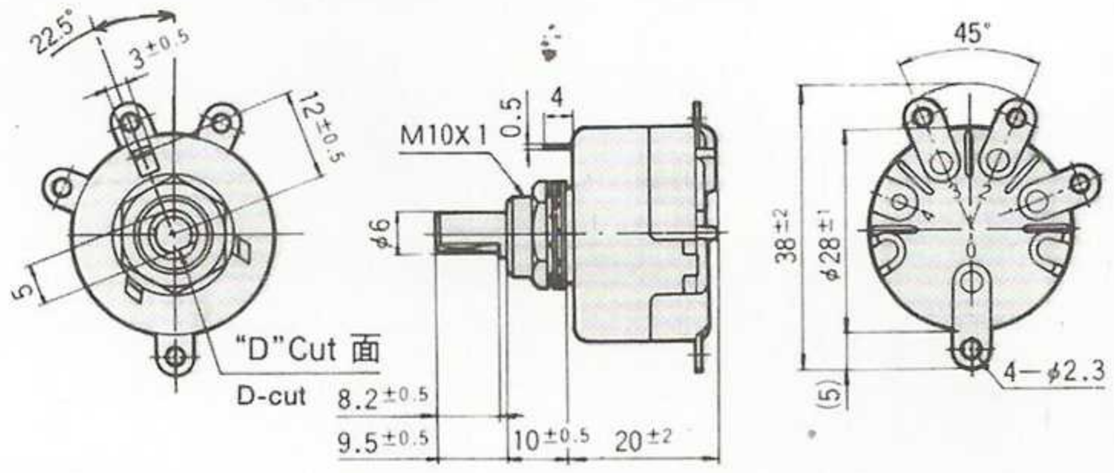

Terminal number shown on box

Shaft stop	Terminal connecting.common(C) 1	2	3	Circuit diagram	Number of step	Step angle
1	O			Co 1 2 3	2	45°
2		O				
3			O			

●The circuit diagram shown above is the one when the shaft is fully turned counterclockiwise

Rating		Initial contact resistance	Dielectric strength	Insulation resistance	Electrical life
SRF113	AC125V 6A AC250V 3A	20mΩ Max. (DC2~4V 1A)	AC1500V 1minute	100MΩ Min (DC500V)	10,000 cycles

●Ratings are at resistive load.

■ Pannel Hole / Panel Cut-Out Dimensions

Panel thickness : 5mm max

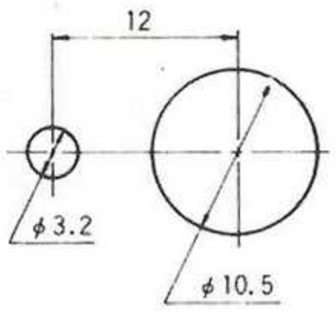

SRF114-2 1回路 4接点 / 1-pole 4-position

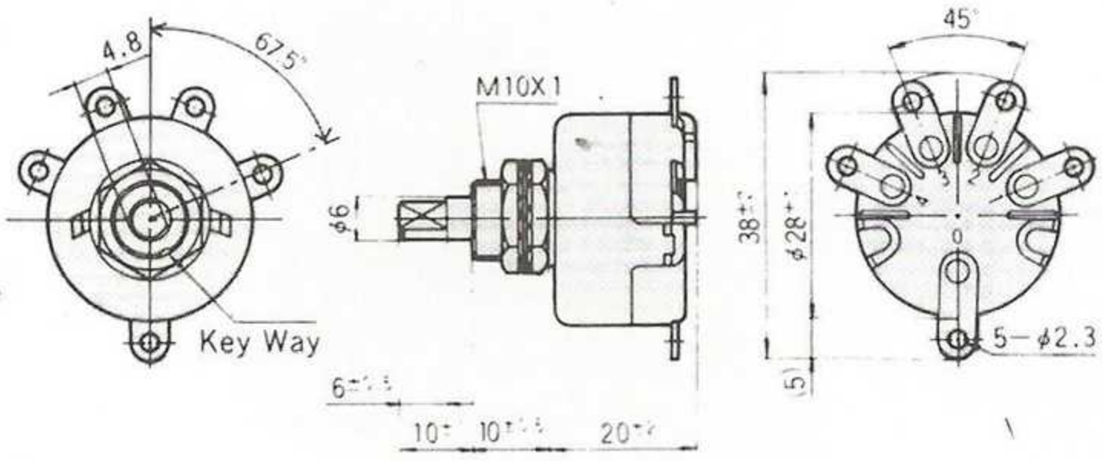

Terminal number shown on box

Shaft stop	Terminal connecting.common(C)				Circuit diagram	Number of step	Step angle
1	O				Co 1 2 3 4	3	45°
2		O					
3			O				
4				O			

●The circuit diagram shown above is the one when the shaft is fully turned counterclockiwise

Rating		Initial contact resistance	Dielectric strength	Insulation resistance	Electrical life
SRF114-2	AC125V 3A	20mΩ Max. (DC2~4V 1A)	AC1000V 1minute	100MΩ Min (DC500V)	10,000 cycles

●Ratings are at resistive load.

■ Pannel Hole / Panel Cut-Out Dimensions

Panel thickness : 3mm max